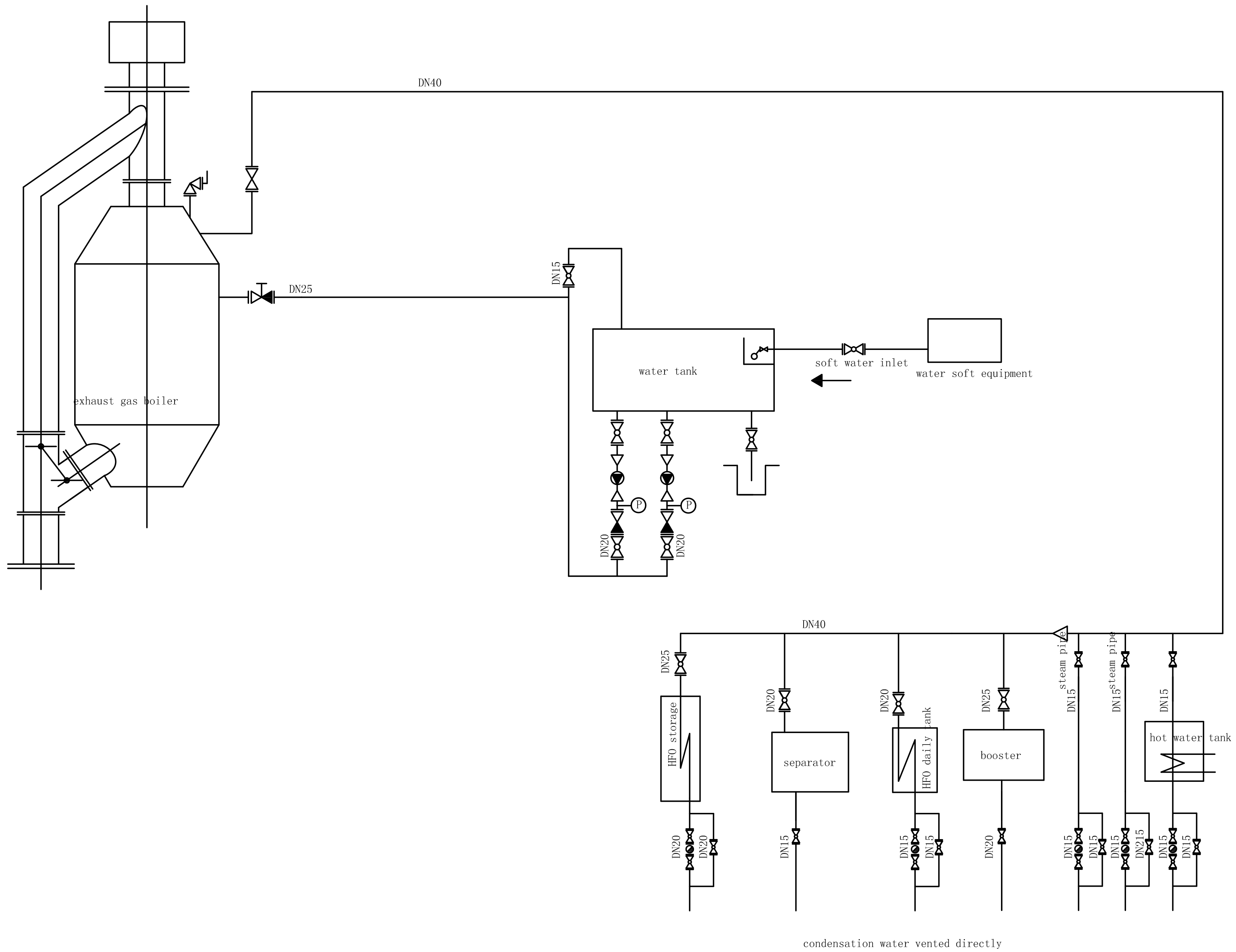

							DATE BY	CHANGE NOTICE	SCALE	Leda Greenpower (Beijing) Trading & Engineering Co., Ltd.
									DATE	
							CHANGE		DRAWN	NAME Steam system for 1x2MW HFO
										Power plant without condensation water recycle
									CHK'D	MATERIAL
									APPR.	
							SYM		APPR.	DRWG NO.